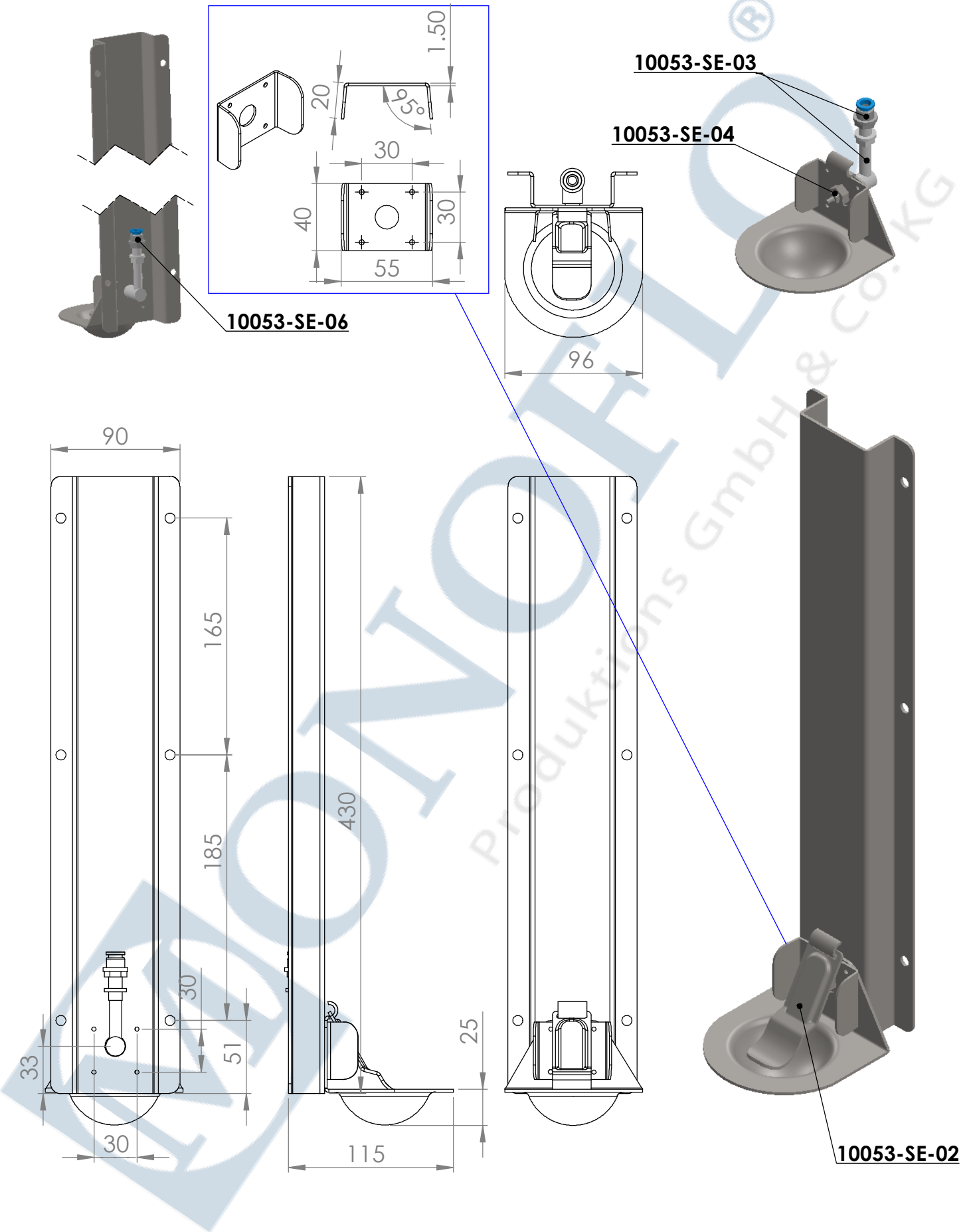

DATE DRAWN	28.10.2020	MATERIAL:	AISI 304	PART NAME:	10053-SE with parts
1st revision	04.11.2020	Total Net weight:			
2nd revision	27.01.2021			NOTES:	
3rd revision					
Last revision				SCALE: 1:5	PAGE 1 / 1 A4